

UNICA

INSTALLATION GUIDE

Nativa

Installation · substructure · fastening · finishing details

TARIMAS Y SISTEMAS DE EXTERIOR

Read before installation

GENERAL PRINCIPLES

UNICA PVCore must be installed following the same principles of good construction practice used for timber or composite decking, and in decking, and in accordance with local building codes and the installation guidelines set out in this document. UNICA accepts no responsibility accepts no responsibility for improper installation of this product. PVCore decking may not be suitable for every application, and it is the sole and it is the sole responsibility of the installer to ensure that UNICA PVCore is suitable for its intended use. As every installation is unique, it is installation is unique, it is also the installer's responsibility to determine the specific requirements for each decking application. application.

Do not store the material in direct sunlight when the outdoor temperature is above 28 °C. The material must be stored in the shade and in the shade and in cool areas.

These instructions are intended to ensure that UNICA PVCore DECKING is installed correctly, allowing the product to provide its expected durability and performance.

Following these instructions is necessary to ensure the correct performance of your installation. Read the instructions in full before starting the installation.

SUBSTRATE CONDITION

For an optimum UNICA Decking installation, the substrate must be stable, firm and in good condition so that the joists can be mechanically fixed to it without causing crumbling. A slight existing slope is required to allow proper water drainage and to prevent water accumulation or flooding. If the joists cannot be screwed down because of the risk of leaks, water ingress, or simply because the type of substrate does not allow it, a closed grid-type substructure must be created. This gives the structure sufficient internal strength and prevents movement of the decking.

Joists should only be screwed down when the substrate allows it: it must be rigid, must not crumble, and there must be no risk of causing water ingress or leaks into rooms below.

On surfaces where the joists cannot be screwed or bonded, such as soil or garden lawn, concrete slabs must be installed. The clear distance between slabs must never exceed 500 mm. The joists can then be screwed to these slabs. On roof terraces or in locations where mechanical fixing is not possible, another method is to create a closed substructure and support it on pedestals, concrete slabs or another levelling element.

Joist fixing

JOIST TYPE

Choosing the correct joist type and quality is essential to to increase the durability and service life of the installation, as installation, as the joists are a key part of the structure.

For maximum coverage and to extend the life of the deck, we recommend using joists made from:
- 70 × 42 mm foamed PVC
- 70 × 30 mm Class IV pressure-treated pine
- Aluminium

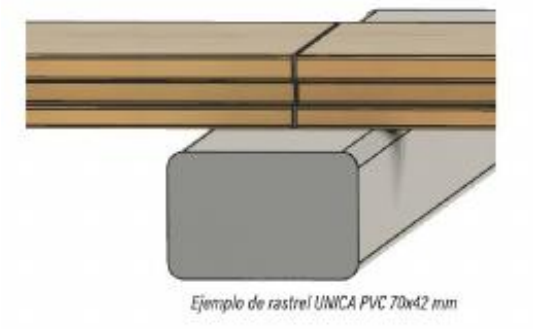

Ejemplo de rastrel UNICA PVC 70x42 mm

The following types are also permitted:

- Aluminium 50 × 25 mm
- Class IV pressure-treated pine 50 × 30 mm

JOIST CALCULATION AND INSTALLATION

Joists must be installed perpendicular to the direction in which the decking boards will run.
The maximum centre-to-centre joist spacing must be:

Residential use: maximum 366 mm (315 mm recommended)
Commercial use: maximum 310 mm (275 mm recommended)

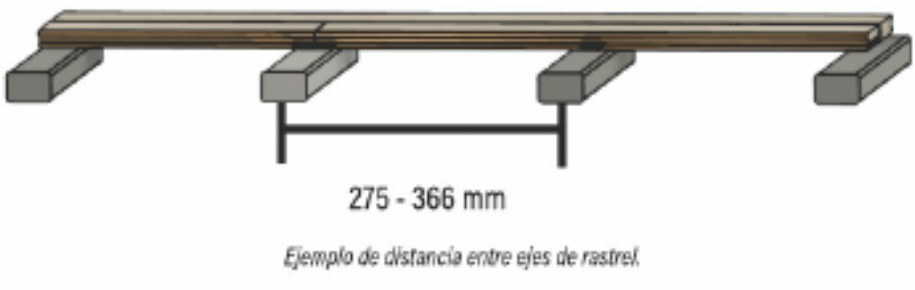

Ejemplo de distancia entre ejes de rastrel.

Joist fixing

JOIST INSTALLATION



Sufficient clearance between the decking and the substrate is recommended to provide correct ventilation, with a minimum of minimum of approximately 3–6 cm. The decking must never be installed directly on the substrate. Joists are fixed using impact using impact anchors and screws or PU adhesive.

The perimeter must always be secured with anchors and screws for correct fixing. Where mechanical fixing is not possible, follow the recommendations on the previous page; the joist may also be bedded or packed with cement.

For levelling, wedges must be installed at intervals of no more than 50 cm and fixed in the same way using PU adhesive. The same rules apply to levelling systems using pedestals.

RECOMMENDED VENTILATION: maintain a minimum 3–6 cm cavity between the decking and the substrate.

Installation using clip fasteners

BOARD END JOINTS

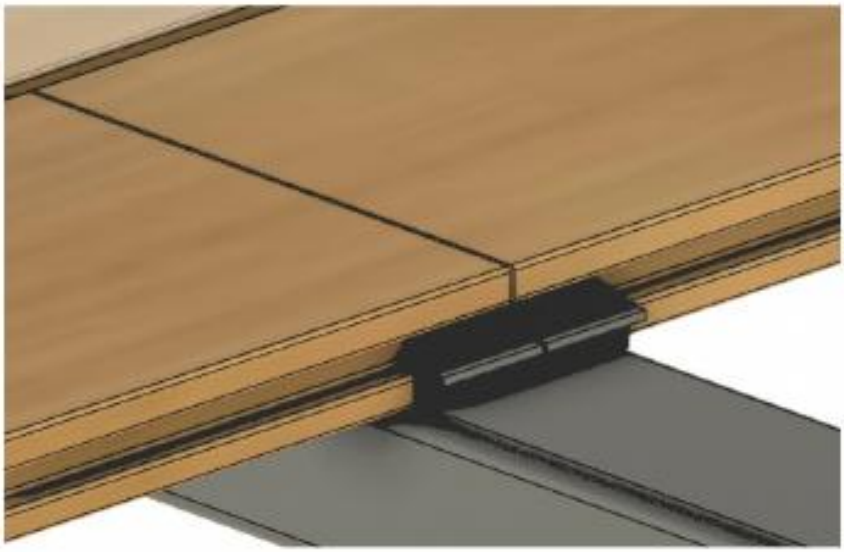

The decking boards are installed perpendicular to the joists using fastening clips. The clips are screwed to the joists.

At board end joints, two clips must be used, one for each board. For UNICA PVCore decking, the board ends must be positioned fully together at the time of installation, leaving a maximum gap of 1–2 mm.



To secure the remaining boards to the joist, use a single clip fixed in the centre.

Decking installation



Once the board direction and starting point have been determined, begin either with a starter clip or by screwing down the first down the first board.
The starter clip secures the end of the board nearest to the wall or the starting edge of the installation.



The recommended perimeter expansion gap is 8–15 mm, depending on the dimensions of the installation.
We recommend using UNICA-approved clips, as they provide secure fastening, durability and correct water drainage. For a correct installation, regardless of the selected board direction, all board ends must be fully supported by a joist, must not be left unsupported, and must be fixed using two clips.

Installation / fixing of finishing trims



Finishing trims or fascia pieces provide a clean finish to areas such as stairs, pool edges, exposed sides and end details. The fixing details. The fixing method should be selected according to each specific situation, while always maintaining the required 2–3 mm required 2–3 mm expansion gap.

UNICA offers custom-made finishing pieces. DO NOT FORGET TO CONSULT YOUR SUPPLIER.

Pre-drilling or countersinking is recommended before inserting the screw to ensure a flush finish with the piece. Where necessary, use PU adhesive and adhesives suitable for PVC.

Remember to allow for expansion in finishing pieces; they undergo contraction and expansion movements in the same way as the decking. Each 2200 mm finishing piece must be fixed with a minimum of 4 screws.

CUSTOM FINISHES · STAIRS · POOLS · END DETAILS